On the Technical Aspects concerning the Support of both Voice & Internet Multimedia Services in 3G Wireless Networks

Stavros A. Kotsopoulos, *Wireless Telecommunication Lab, University of Patras, Greece*
Dimitrios Zevgolis, *Division of Informatics and Multimedia, Hellenic Open University*

ABSTRACT

Voice telephony is the most important service on today's cellular mobile radio communication systems. During the current decade, it is difficult to say how long this will be the case, by taking into account the rising demand for new Internet Multimedia services. It is very essential that the 3G mobile networks should support both voice and multimedia services. This paper deals with the technical parameters that are involved during the handover procedures of the 3G subscribers and to propose new techniques in the dynamic channel assignment and a new architecture on the radio network level of the system.

3G Cellular Mobile Network

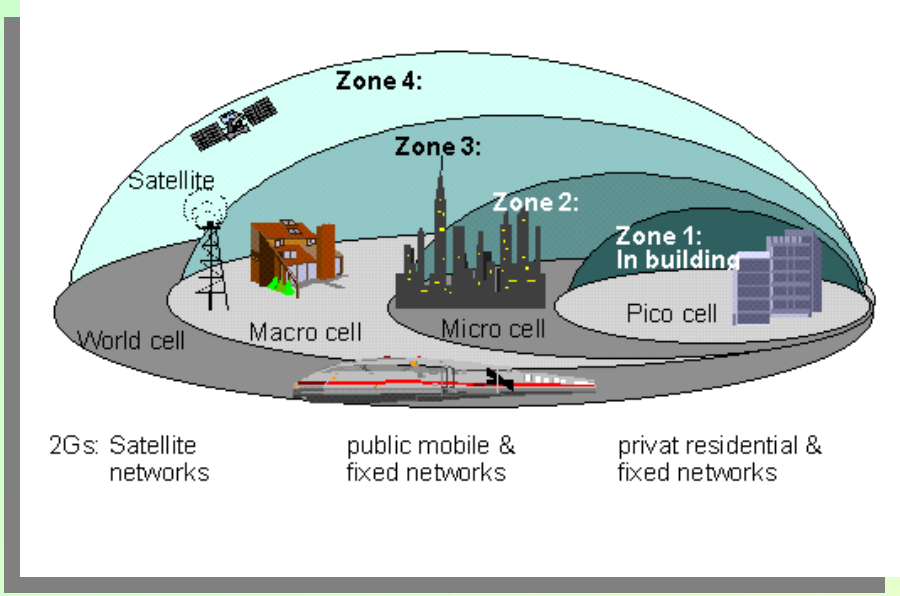

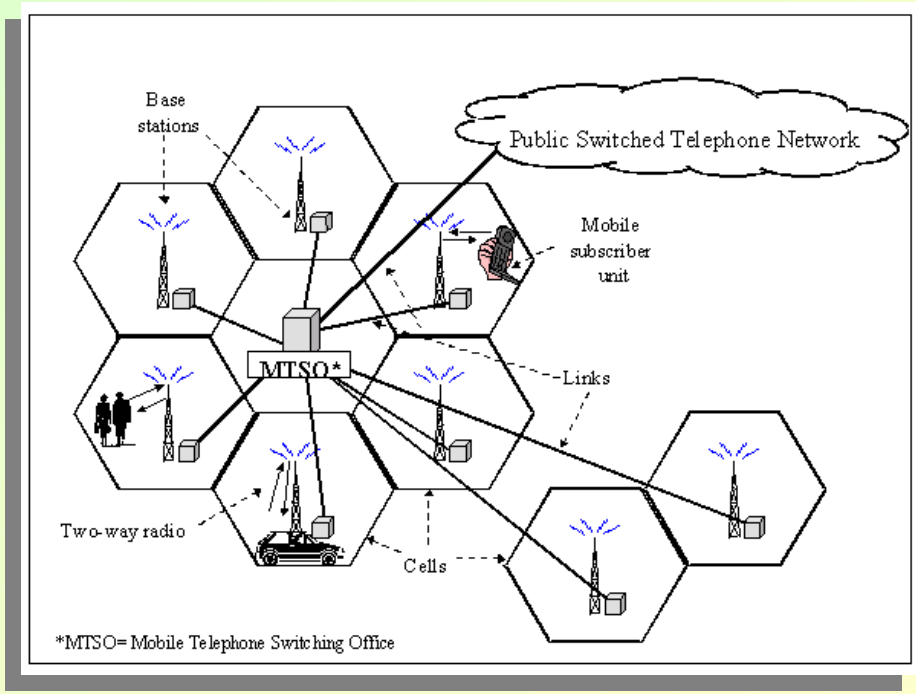

Internet Multimedia Services

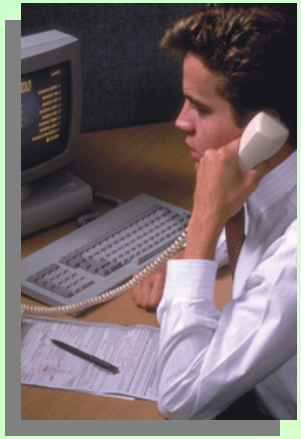

Voice

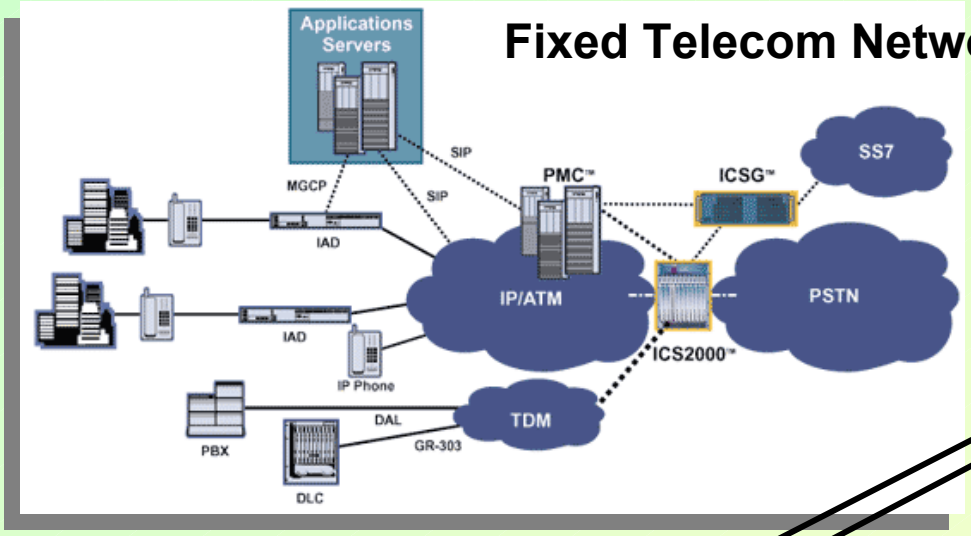

MSC

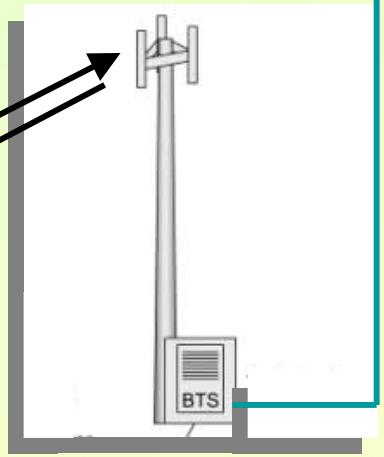

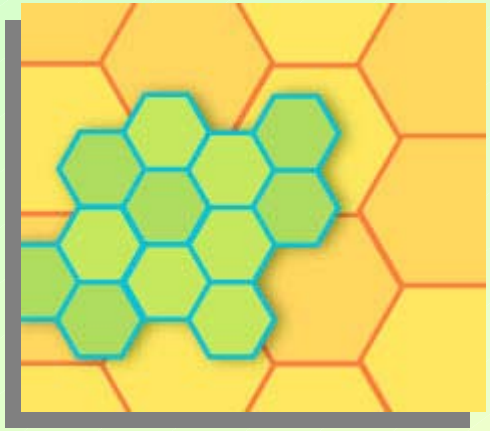

Data

Radio Network Architecture

2.5 G

GPRS Architecture

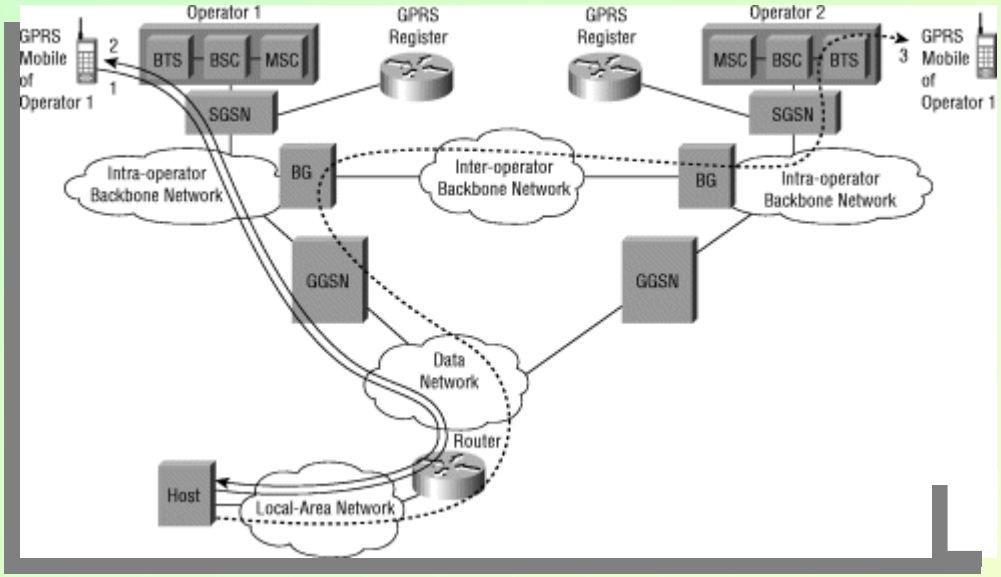

3 G

UMTS Architecture

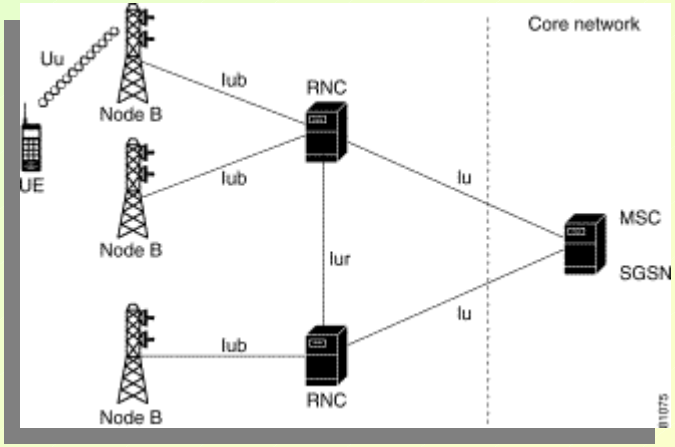

Support → **Internet Multimedia Services**

Voice + Data

Technical Parameters

Support the appropriate QoS for Call Continuation provision

- **Transmit Power Regulation:** Base Station, Portable Unit
- **Handover Criteria**

  Control of the ratio: $Carrier/Interference$
- Optimum Traffic Channel Assignment
- Optimum Call Routing in the radionetwork's switching level
- Minimization of Interference level
- Maximization of $Signal/Noise$ + $Bit\ Error\ Rate\ (BER)$

Channel Assignment Techniques

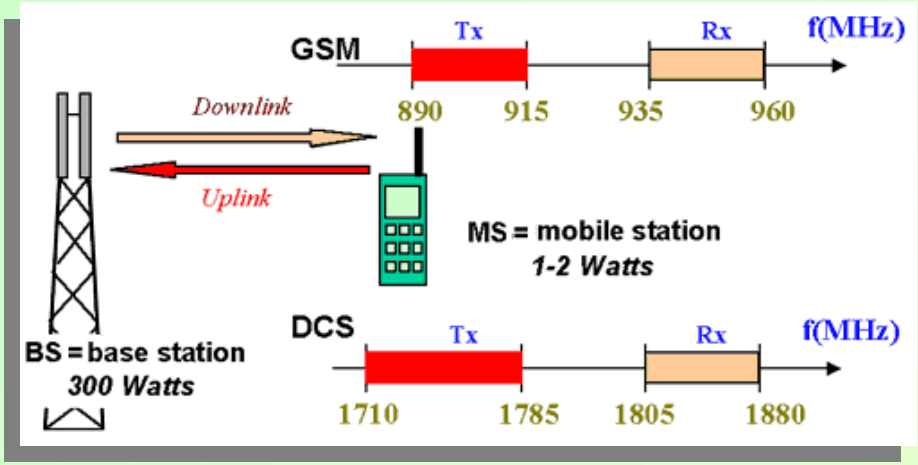

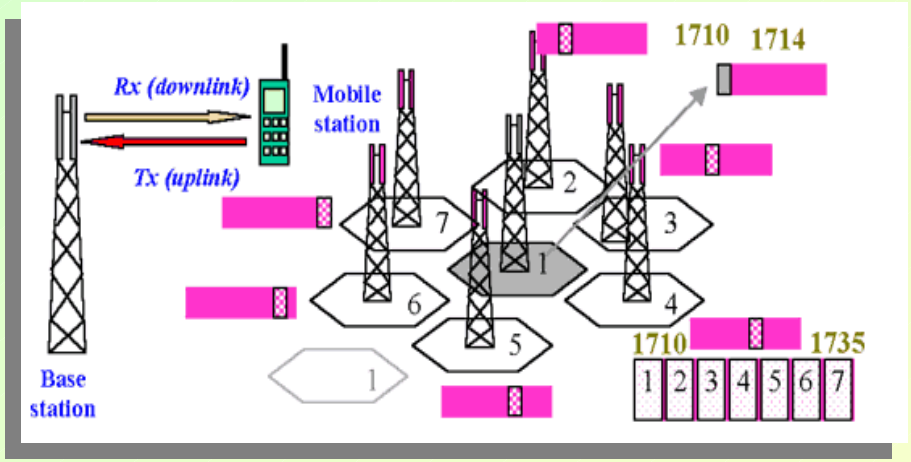

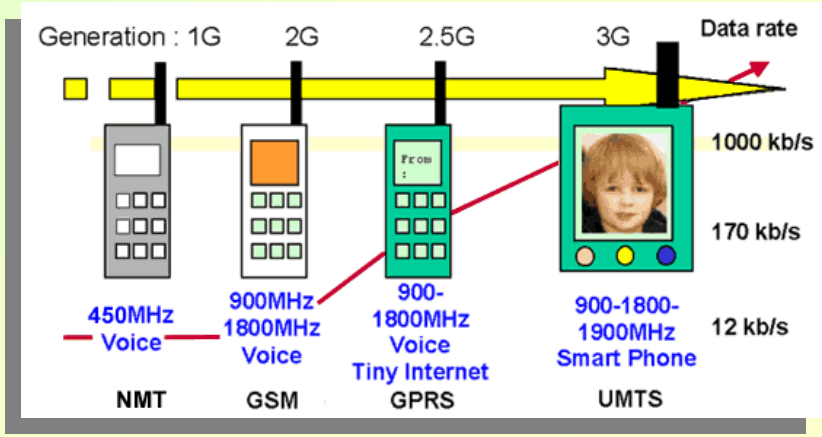

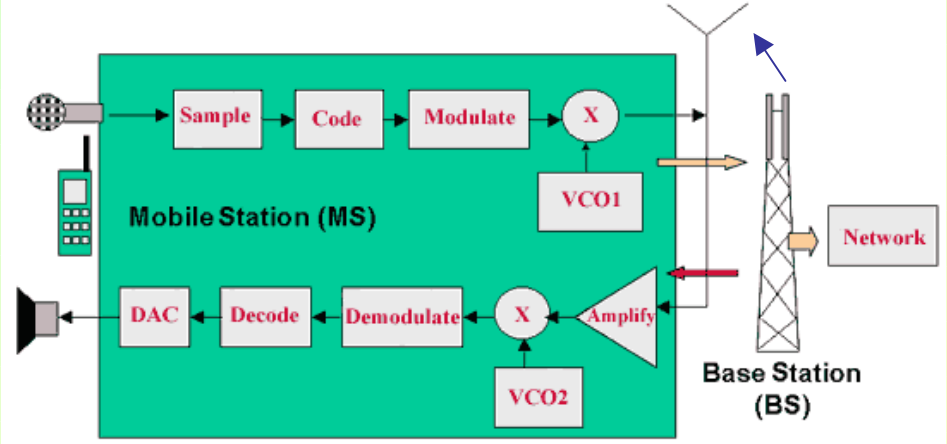

Conclusions -1

Transmit Power Regulation: **Base Station, Portable Unit**

Proposed Technique: Implementation of an algorithm in order to control the transmit power by continuously checking the received signal level

Handover Criteria

Control of the ratio: $Carrier/Interference$

Proposed Technique: Implementation of an algorithm to support the Inter-cell Handover and the Intra-cell Handover by checking the $Carrier/Interference$ on a continuous basis

Optimum Traffic Channel Assignment

Proposed Technique: Implementation of an algorithm to support Dynamic Channel Assignment in each geographic cell

Conclusions -2

Optimum Call Routing in the radionetwork's switching level

Proposed Technique: Implementation of an algorithm in order to adopt Asynchronous Transfer Mode procedures for supporting optimum call rerouting

Minimization of Interference level

Proposed Technique: Implementation of an algorithm in order to create intermodulation free frequency lists

Maximization of $Signal/Noise + Bit\ Error\ Rate\ (BER)$

Proposed Technique: Adoption of appropriate modulation and coding techniques for securing the noise immunity and to secure the appropriate BER level